WCT SERIES CABINET

Save These Instructions

This manual contains instrucons and warnings that must be followed during the installaon and opera - on of the product described in this manual. Failure to comply may invalidate the warranty and cause property damage or personal injury.
Thank you for purchasing a Linkbasic product. Please check the product carefully and contact Linkbasic for assistance if any parts are damaged or missing. Do not aempt to install or use product if it has been damaged. This product contains small items that could be a choking hazard – keep these items away from children.
For permanent wall mounng, be sure to securely fasten the enclosure to the building structure before operaon.
Do not use with equipment that is heavier than the indicated weight capacity for this product. This product is designed to be installed indoors on wood stud walls, solid concrete walls or brick walls. Make sure that the supporng surface will safely support the weight of the equipment and all aached hard - ware and components. It is recommended that installaon be performed by a qualified installer. Linkbas - ic cannot be held responsible for damage to equipment or personal injury resulng from improper use or installaon of product.
Maintenance: we recommend checking on regular basis that the product is secure and safe to use.
Limitaons of Liability: In no event will Linkbasic Co. be liable for any damages, whether direct or indirect, special, punive, incidental or consequenal damages (including, but not limited to, lost profits or revenue, loss of use, lost business opportunies or loss of goodwill) or for the costs of procuring substute products, arising out of or in connecon with the use of the product, whether such liability arises from any claim based upon contract, warranty, tort (including negligence), product liability or otherwise, whether or not seller has been advised of the possibility of such loss or damage. In no event will seller’s total cumulave liability, from all causes of acon and all theories of liability, exceed the total amounts actually paid to seller by customer under the order that gives rise to any liability hereunder.

Specification

SKU	Capacity(U)	Depth(mm)	Width(mm)	Height(mm)	Colour
WCT04-282-A	4U	7.9”(200mm)	11.02”(280mm)	11.0”(280.2mm)	Black
WCT06-282-A	6U			14.5”(369.1mm)	Black
WCT09-282-A	9U			19.9”(502.45mm)	Black
WCT012-286-A	12U	10.2”(260mm)		25.0”(635.8mm)	Black

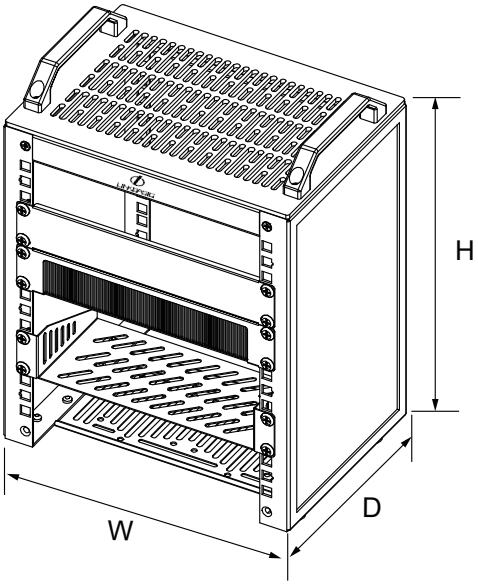

WCT SERIES CABINET

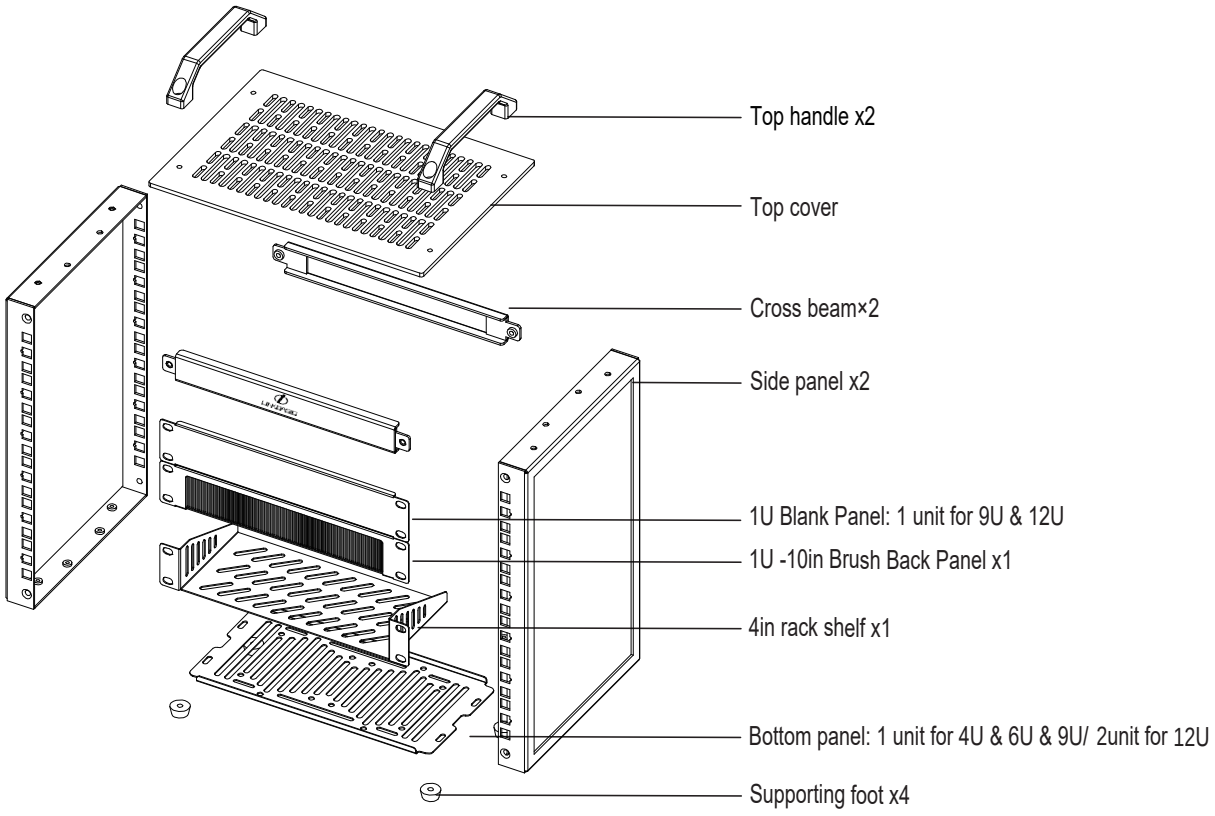

Accessories

L

M5x10mm screws （4）

Rack Size：4U/6U/9U/12U

M

M4x14mm screws （4）

Rack Size：4U/6U/9U/12U

N

4U/6U/9U

M4x8mm screws （4）

12U

M4x8mm screws （8）

O

4U

M6 screw & nut （16）

6U

M6 screw & nut （24）

9U

M6 screw & nut （36）

12U

M6 screw & nut （48）

Step1.

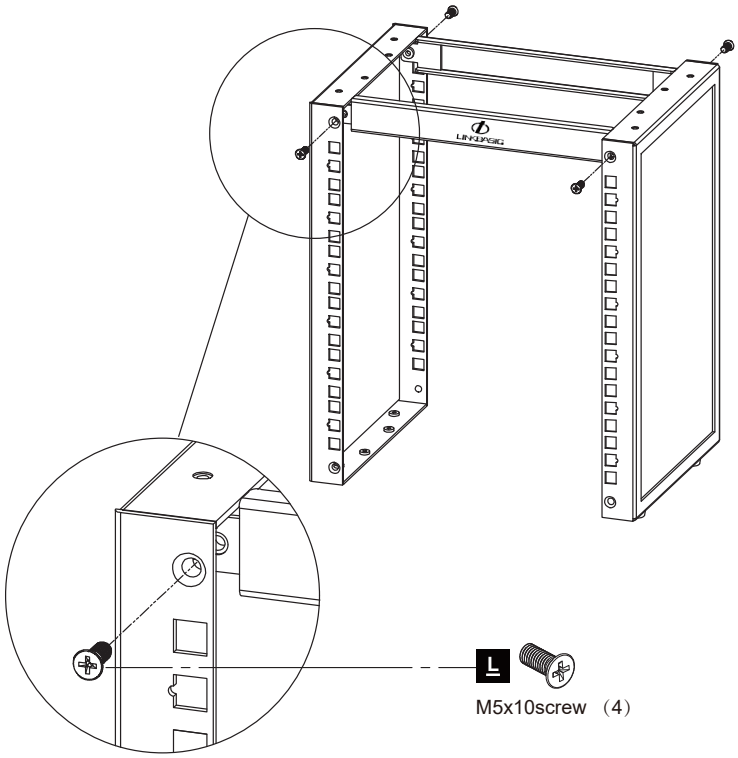

WCT SERIES CABINET

Step2.

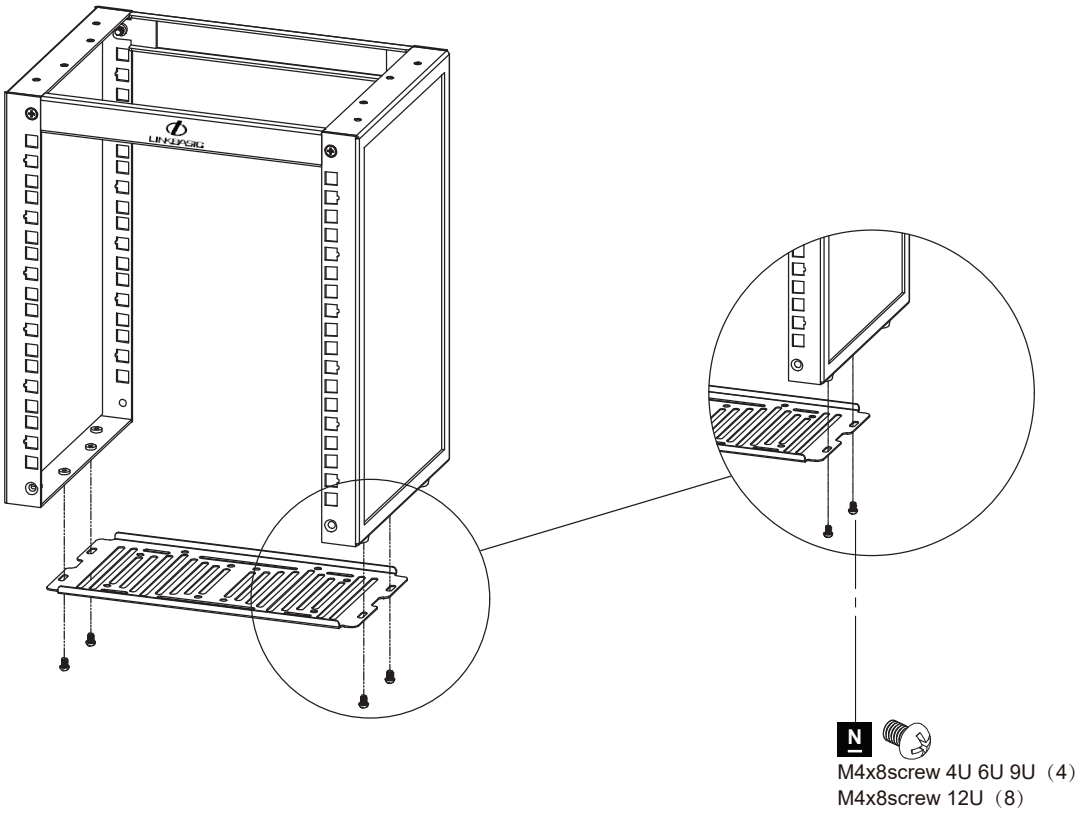

One bottom panel for 4U/6U/9U models and two panels for 12U models.Secure panels with M4x8 screws.
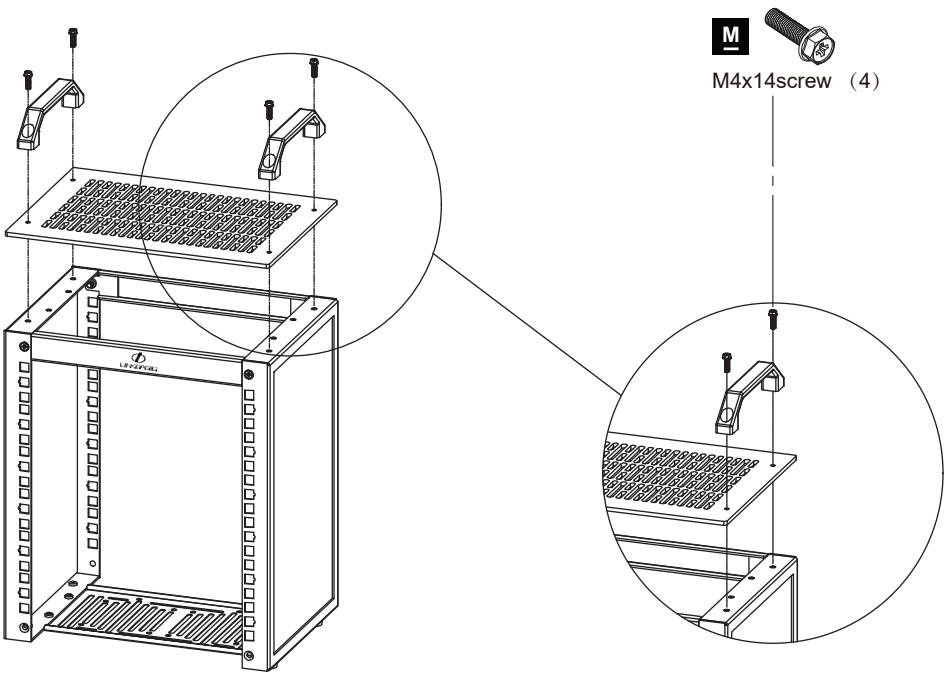
Step3.